Mini Input Modules

VF5660 Mini Priority Switch Monitor Module

The Mini Priority Switch Monitor is designed to monitor the state of one or more single pole, volt free contacts and to report the status to Apollo compatible analog control equipment. It can also place a signal on the loop to provide early warning if a device such as a pull station is operated.

- Three input states – "normal", "fault" and "alarm"
- Visible LED with remote LED connection option
- Loop powered
- Designed to fit into equipment with limited space
- Easy to install
- Monitors equipment where a fast response is required
- Interrupt facility
- Class A or B input capability

VF5661 Mini Switch Monitor Module

The VF5661 Mini Switch Monitor Module is designed to monitor the state of one or more single pole, volt free contacts and to report the status to Apollo compatible analog control equipment.

- Three input states – "normal", "fault" and "alarm"
- Visible LED with remote LED connection option
- Loop powered
- Designed to fit into equipment with limited space
- Easy to install

VES Fire Detection Systems,
620 Allendale Road, King of Prussia, PA. 19406
Tel (US): 800.270.3066 (Toll free) **Tel (non US):** (001) 610.992.3378
Fax: 610.992.3380
E-mail: info@ves-network.com
Web: www.ves-network.com

VF5608

Mini Monitor Module

Mini Input Modules

Standard Features

- Designed for use where space is limited
- Features a short circuit isolator as standard
- Interrupt/non interrupt in one unit
- "Pre-alarm" status available
- LED status indication (Yellow - Fault, Green - Polling, Red - Alarm)
- DIN Rail mountable

Overview

The VES Mini Monitor Module, part no VF5608-00, is a loop-powered device, which incorporates a monitored input circuit for connection to switches. The module is supplied in a small housing designed to fit into an electrical box, or to be DIN Rail mounted.

It is designed to monitor the state of one or more single pole, volt free contacts connected on a single pair of cables and to report the status to Apollo compatible analog control equipment.

The VES Mini Monitor Module, has an optional priority interrupt facility to give fast response and can be fitted in an electrical box behind a pull station. This option is selected via the eighth section of the DIL switch.

Please note: When the eighth section of the DIL switch is changed, the VES Mini Monitor Module will change the type code it sends to the panel.

The mini switch monitor has three status LEDs:

Red	Indicates alarm condition
Green	Indicates polling
Yellow	constant, short circuit on loop wiring
	pulsing, fault on the monitored circuit

Wiring options for the Mini Switch Monitor

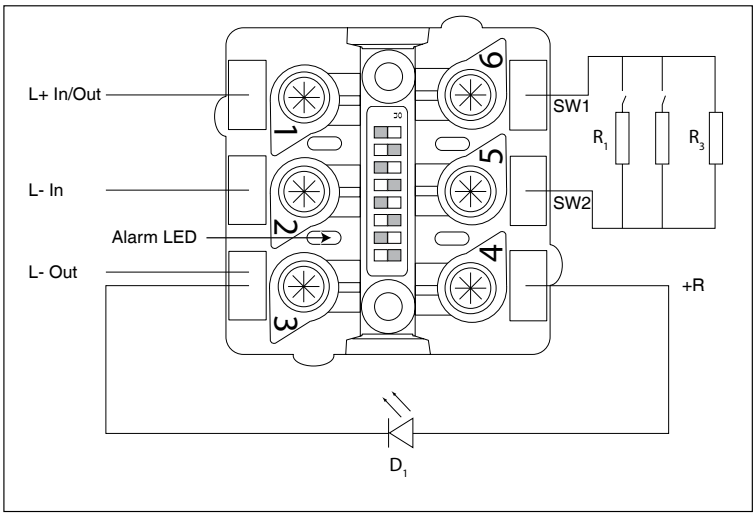

Fig 1 – Connections to the Terminals.

Key

R_1	Alarm	1K Ω
R_3	End of Line	20K Ω
D_1	Optional Remote LED	

Technical Specifications

Operating Voltage: 17-28V DC

Protocol: 5-9V

Current Consumption at 24V
Quiescent current: 200µA
LED Operated Alarm: 3.4mA +Quiescent
Remote and LED Alarm: 6.2mA +Quiescent
Switch Fault LED: +2.8mA (pulsing 0.5s on, 0.5s off)

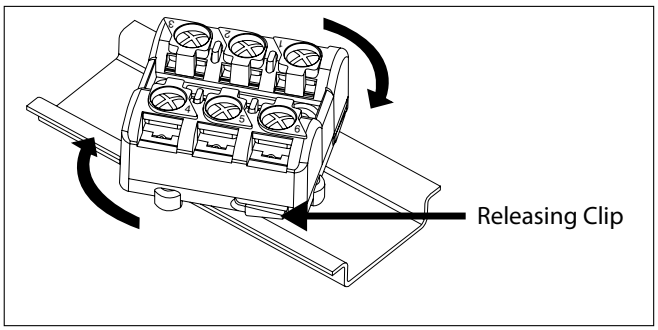

Fig 2 – Mini Switch Monitor on a DIN Rail.

VES Fire Detection Systems,
620 Allendale Road, King of Prussia, PA. 19406
Tel (US): 800.270.3066 (Toll free) **Tel (non US):** (001) 610.992.3378
Fax: 610.992.3380
E-mail: info@ves-network.com
Web: www.ves-network.com